VTM-51.2.00.000

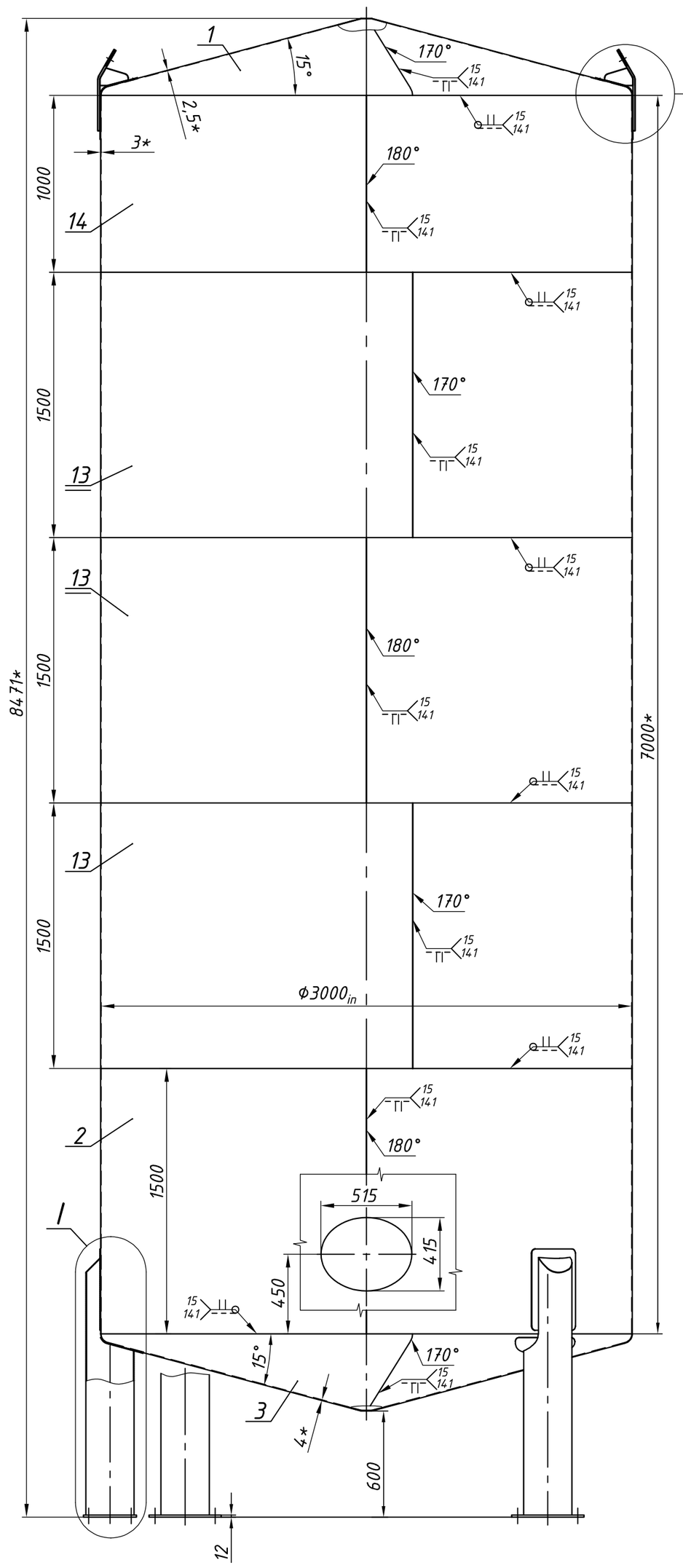

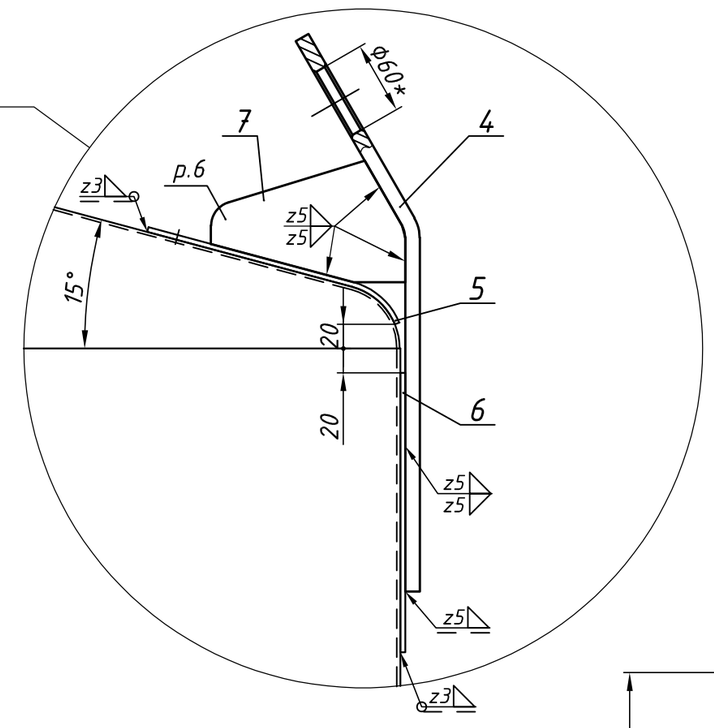

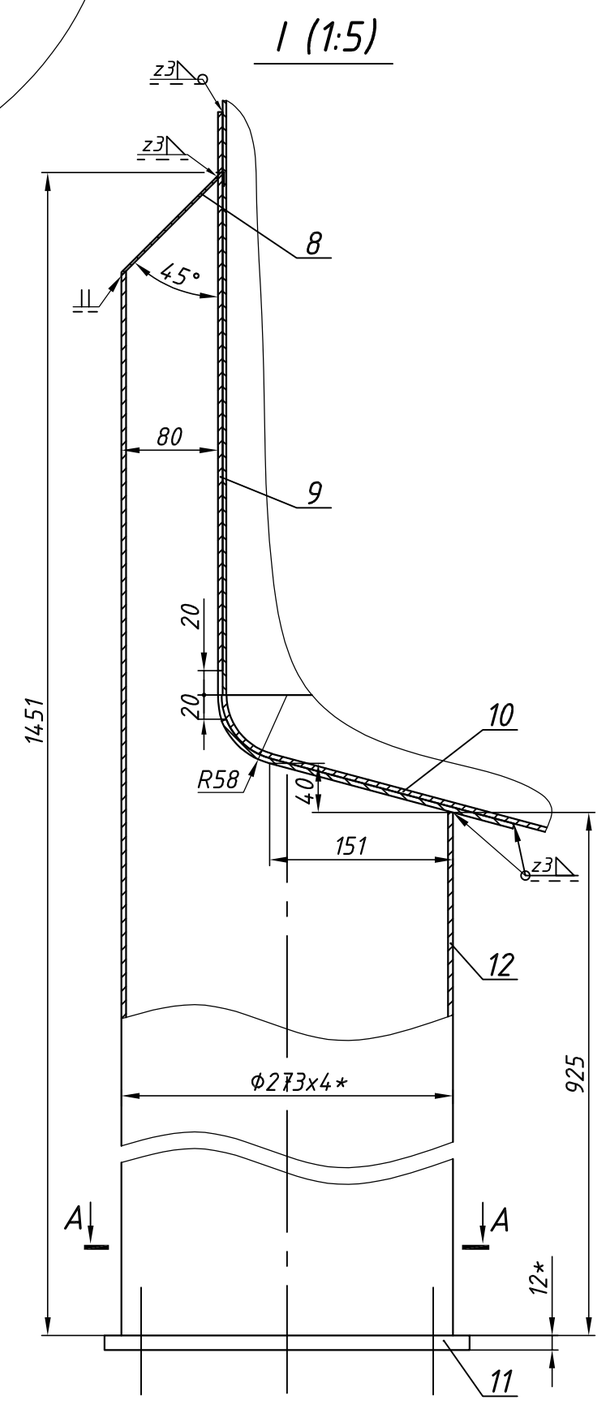

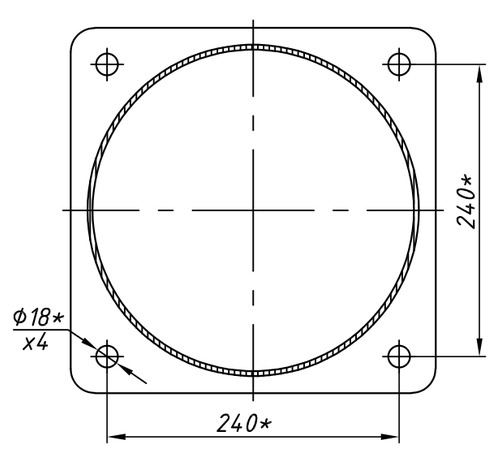

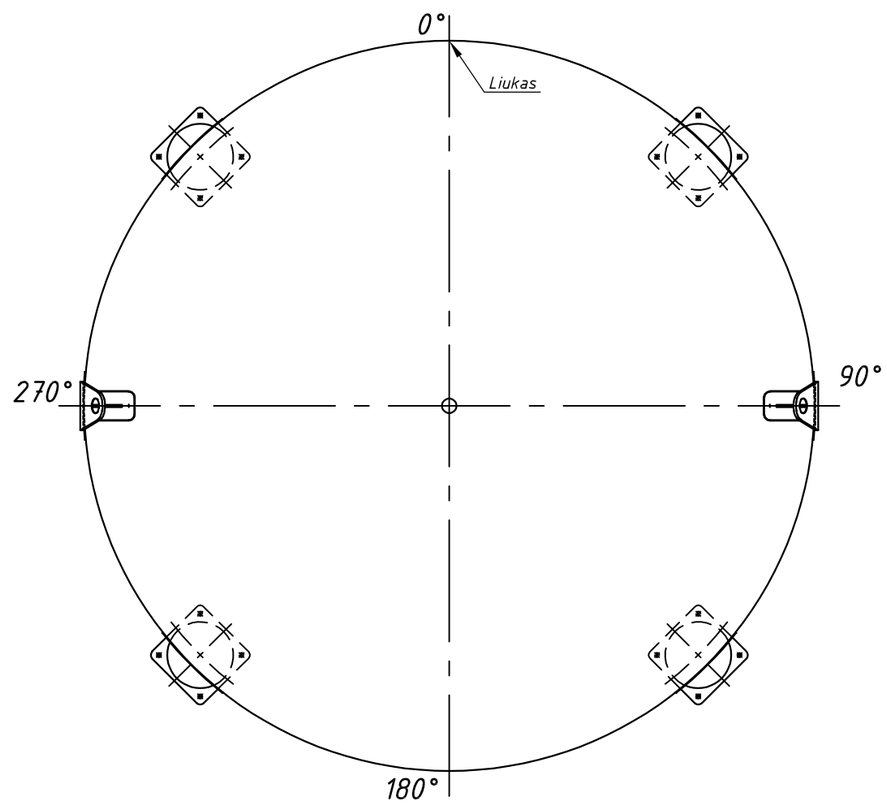

1.*For information only.
2. Non mentioned tolerances – holes H16, shafts h16, other ±IT16/2.
3. Not mentioned surface roughness Ra 12,5 μm.
4. Cylinders pos. 2 and 9 must be checked according to cones pos. 1 and pos. 3.
5. Mark (punched in) tanks serial numbers: ID 351251219-010-01; ID 351251219-010-02; ID 351251219-010-03 or ID 351251219-010-04.
6. Actual capacity 151,5 m³.

Pos	Designation	Description	Material	Q-ty
14/bb	VTM-51.2.00.014	Cylinder	Plate 1.4404.2B EN10088-2, s=3,0 mm B×L=1000±1×9434±3 mm	1
13/bb	VTM-51.2.00.013	Cylinder	Plate 1.4404.2B EN10088-2, s=3,0 mm B×L=1500±1×9434±3 mm	3
12/bb	VTM-51.2.00.012	Leg	Leg – pipe 1.4301; EN 10217-7 Φ273x4; L=1451±2 mm	4
11/A4	VTM-51.2.00.011	Plate	Plate 1.4301.1D EN10088-2, t=12 mm	4
10/A4	VTM-51.2.00.010	Plate	Plate 1.4301.2B EN10088-2, t=4,0 mm	4
9/A4	VTM-51.2.00.009	Plate	Plate 1.4301.2B EN10088-2, t=4,0 mm	4
8/A4	VTM-51.2.00.008	Plate	Plate 1.4301.2B EN10088-2, t=2 mm	4
7/A4	VTM-51.2.00.007	Plate	Plate 1.4301.1D EN10088-2, t=10 mm	2
6/A4	VTM-51.2.00.006	Plate	Plate 1.4301.2B EN10088-2, t=4,0 mm	2
5/A4	VTM-51.2.00.005	Plate	Plate 1.4301.2B EN10088-2, t=4,0 mm	2
4/A4	VTM-51.2.00.004	Lifting lug	Plate 1.4301.1D EN10088-2, t=12 mm	2
3/A4	VTM-51.2.00.003	Bottom	Plate 1.4404.2B EN10088-2, t=4,0 mm	1
2/A3	VTM-51.2.00.002	Cylinder	Plate 1.4404.2B EN10088-2, t=3,0 mm	1
1/A4	VTM-51.2.00.001	Cone	Plate 1.4404.2B EN10088-2, t=2,5 mm	1

Data
26.01.20

VTM-51.2.00.000

Tank 50 m³

2120 | 1:25

Revision 0

ACMM